SOSEN

SPECIFICATIONS

SS-100CNH-300*
CC DRIVER

Model: SS-100CNH-300*

Power: 100W

Rev.: V04

Release date: 2026-09-03

SS-100CNH-300* LED DRIVER

Features

- Efficiency up to 97%
- Isolated dimming: 0-10V, PWM, Resistor
- Optional aux: 12V/0.2A
- Time-controlled programmable
- Dim to off
- Standby Power<0.5W
- Protections: SCP/OTP/OVP/UVP
- Compatible with intelligent emergency controls
- Wide output voltage range,Dial Power Range Programmable
- IP65
- Surge protection: CM: 6kV,DM: 6kV
- Long lifetime
- Warranty: 5 years

c US E360758

IP65

Description

SS-100CNH-300* series is 100W round non-isolated constant current LED driver. This series of products have the advantages of isolated dimming function, ultra-high efficiency, compact housing, fully potted, compatible with intelligent emergency control, good heat dissipation and waterproof performance, high reliablility, high cost-effective and so on.

Applications:

industrial and mining lights, sports lighting

Model List

Model	AC Input Range	Max. Pout	Vout Range	Recommended Volltage	Iout	Default Current	THD (Typ.)	PF (Typ.)	Eff. (Typ.)	Max.Tc
SS-100CNH-300*	108-305Vac	100W	180-300V	200V-300V	0.125-0.5A	0.4A	4%	0.99	97%	90°C

Note:

1.Default Tested:at220Vac,fullload, Ta 25°C.

2.The performance of the LED Driver can be guaranteed within the full power Vo range.The voltage lower than full power Vo range, it is need to test the performance with the LED module.

SHENZHEN SOSEN ELECTRONICS CO.,LTD.

10F, Pengzhanhui No 1 Building, Zhongxin Road No 233, Xinqiao Street, Baoan District, Shenzhen, China

0755-29358800 www.sosen.com sosen@sosen.com

"*" Means Additional Function

"*"	3Angle+3Color Temperature+ 3 Power	3CCT+DIP Power	DIP Power	AUX 12V suffix:H)	Dimming off 0-10V/PWM/Resistor	1-10V/PWM /Resistor (suffix:B)	Remark
BB			✓			✓	
BD		✓				✓	
BHB			✓	✓	✓		
BHD		✓		✓	✓		
BHT	✓			✓	✓		

Input Characteristics

Parameter	Min.	Typ.	Max.	Remark
Rated AC Input Range	120Vac		277Vac	
AC Input Range	108Vac		305Vac	Reference derating curve
Input DC Voltage Range	140Vdc		280Vdc	
Input Frequency Range	47Hz	50/60Hz	63Hz	
Max Input Current			1.2A	120Vac, Full load
Max Input Power			120W	120Vac, Full load
Max Inrush Current(120Vac)			50A	Cold start
Max Inrush Current(220Vac)			90A	Cold start
Max Inrush Current(277Vac)			110A	Cold start
Standby Power			0.5W	220Vac, Dim-to-of (BHB/BHD/BHT models)
Power Factor	0.97	0.99		220Vac, Full load
	0.90			120-277Vac,70%-100% load
THD		4%	6%	220Vac, Full load
			10%	120-277Vac,70%-100% load

SHENZHEN SOSEN ELECTRONICS CO.,LTD.
10F, Pengzhanhui No 1 Building, Zhongxin Road No 233, Xinqiao Street, Baoan District, Shenzhen, China
0755-29358800 www.sosen.com sosen@sosen.com

DIP switches:

BD/BHD Dial to adjust the power + dial to adjust the color temperature

CCT	Power
WW	60W
NW	80W
CW	100W

CW: cool light NW: mixed light WW: warm light

BB/BHB dial-up power control

100 (W)	80 (W)	60 (W)

BHT Dial to adjust power+Dial to adjust color temperature+Dial to adjust angle

ANG	CCT	Power
SA	WW	60W
MA	NW	80W
BA	CW	100W

CW: cool light NW: mixed light WW: warm light
SA: small angle MA: medium angle BA: large angle

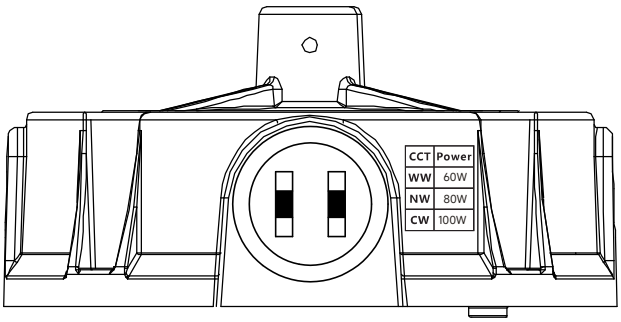

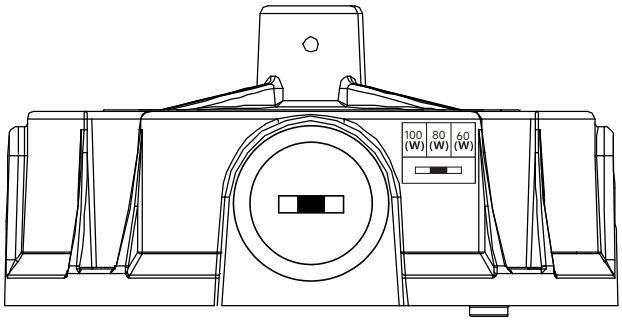

If 2CCT is required please add the following Mylar tabs to be affixed above the toggle code.

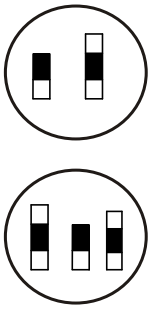

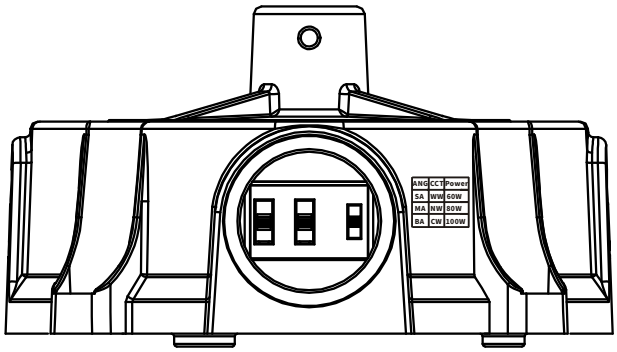

Note:
1.the schematic diagram for the default power level, programmable custom dial power level.
2.adjust the angle, adjust the power and color temperature need to be input after power failure operation.

SHENZHEN SOSEN ELECTRONICS CO.,LTD.
10F, Pengzhanhui No 1 Building, Zhongxin Road No 233, Xinqiao Street, Baoan District, Shenzhen, China
0755-29358800 www.sosen.com sosen@sosen.com

Instructions for using the BHT triple-dial code:

Structural Appearance

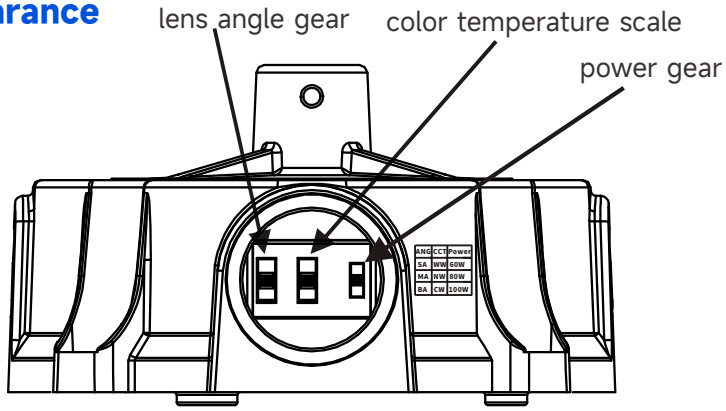

As shown in the figure, the color temperature from top to bottom: WW, NW, CW (warm light, mixed light, cold light)Lens angle gear from top to bottom: SA, MA, BA (small angle, medium angle, large angle) power gear from top to bottom: gradually larger

Wiring method.

Red VOUT1+, Brown VOUT2+, Blue VOUT1-, Black VOUT2-

The dialing schematic diagram illustrates.

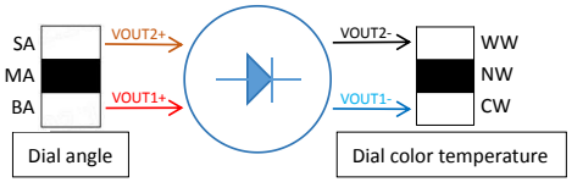

Output positive electrode	Output negative pole	Output state	Angle state	color temperature state
VOUT1+	VOUT1-	on	BA	CW
VOUT1+	VOUT2-	on	BA	WW
VOUT1+	VOUT1-&VOUT2-	on	BA	NW
VOUT2+	VOUT1-	on	SA	CW
VOUT2+	VOUT2-	on	SA	WW
VOUT2+	VOUT1-&VOUT2-	on	SA	NW
VOUT1+&VOUT2+	VOUT1-	on	MA	CW
VOUT1+&VOUT2+	VOUT2-	on	MA	WW
VOUT1+&VOUT2+	VOUT1-&VOUT2-	on	MA	NW

SHENZHEN SOSEN ELECTRONICS CO.,LTD.
10F, Pengzhanhui No 1 Building, Zhongxin Road No 233, Xinqiao Street, Baoan District, Shenzhen, China
0755-29358800 www.sosen.com sosen@sosen.com

Output Characteristics

Parameter	Min.	Typ.	Max.	Remark
O/P Voltage Range	180V		300V	Power derated @180-200V
Rated O/P Voltage	200V		300V	Po=Vo*Io=100W, Full load
Rated O/P Current	0.33A		0.5A	0.5A for 200V,0.33A for 300V
Adj. O/P Current (AOC) Range	0.33A		0.5A	0.4A
	0.26A		0.4A	0.32A,Tolerance ±10%
	0.2A		0.3A	0.24A,Tolerance ±10%
No Load Voltage			350V	
Efficiency @120Vac	93.0%	94.0%		Output 300V/0.33A
Efficiency @220Vac	94.0%	96.0%		Output 300V/0.33A
Efficiency @277Vac	95.0%	97.0%		Output 300V/0.33A
O/P Current Tolerance	-5%		+5%	0.33A~0.5A
O/P Current Ripple(PK-AV)		5%	10%	
Start-up Current Overshoot			10%	Full load
Start-up Time			1.0S	120Vac,Full load
			0.5S	277Vac,Full load
Line Regulation	-3%		+3%	Full load
Load Regulation	-5%		+5%	
Temperature Coefficient	-0.1%/°C		+0.1%/°C	Tc:0°C~90°C
OTP	90°C	93°C	96°C	Drop current when OTP, and it can be automatically restored after the abnormality is removed.
Short Circuit Protection				Driver will not be damaged

SHENZHEN SOSEN ELECTRONICS CO.,LTD.
10F, Pengzhanhui No 1 Building, Zhongxin Road No 233, Xinqiao Street, Baoan District, Shenzhen, China
0755-29358800 www.sosen.com sosen@sosen.com

Other Characteristics

Parameter		Min.	Typ.	Max.	Remark
AUX Power (Optional)	O/P Voltage	10.8V	12V	13.8V	
	O/P Current			200mA	
0-10V Dimming (Optional)	Dim Vmax	0V		12V	DIM+ source current 110uA.
	Dim Range	10%Iomax		100%Ioset	Dimming prohibits reverse connection
	Rec.Dim Range	0V		10V	
PWM Dimming (Optional)	PWM High	9.8V		10.2V	DIM+ source current 110uA.
	PWM Low	0V		0.3V	Dimming prohibits reverse connection
	Frequency	1KHz		2KHz	
	PWM Duty	0%		100%	
Resistor Dimming (Optional)	Resistance	0Kohm		100Kohm	DIM+ source current 110uA.
	Dim Range	10%Iomax		100%Ioset	
Dim to Off BHB/BHD/BHT models	Dim off	0.7V	0.8V	0.9V	Auxiliary source 12V unloaded
	Dim on	0.9V	1.0V	1.1V	
Intelligent Emergency Control (Optional, off by default)	Emergency switchover time	3S			AC power failure switching to battery power supply time
	Output Current		8%	10%	Emergency output current can be set via PC software
	Auto-exit time			2H	When the sensor does not detect a signal configurable
	Access to emergency communications	4Hz duty cycle 25%, high level: 4-10V, low level: 0-0.3V			Duration 30S
	Withdrawal from emergency communications	1Hz duty cycle 25%, high level: 4-10V, low level: 0-0.3V			Duration 2H; configurable
Timing Curve(Optional)		By programming			Set by program
Lifetime(Tc≤85°C)		≥50,000 hours			80% load
MTBF		198,000 hours			220Vac,Full load, Ta=25°C (MIL-HDBK-217F)
Protection class		IP65			
Tc		90°C			
Warranty		5 years			Tc 85°C
Net Weight		760g			Input line: 300mm
Dimension		Φ116mm*62.5mm			WxH

NOTE: All the parameters above are tested Ta 25°C and LED load, unless specified.

SHENZHEN SOSEN ELECTRONICS CO.,LTD.

10F, Pengzhanhui No 1 Building, Zhongxin Road No 233, Xinqiao Street, Baoan District, Shenzhen, China
0755-29358800 www.sosen.com sosen@sosen.com

Environmental Requirements

Parameter	Min.	Typ.	Max.	Remark
Operating Temperature(Tcase)	-40°C	25°C	+90°C	
Storage Temperature	-40°C	25°C	+90°C	
Operation Humidity	10%RH		90%RH	
Storage Humidity	5%RH		95%RH	
Altitude	-65m		4000m	

Safety and EMI/EMS Standards

Certification	Standard	Status	Remark
UL/cUL	UL8750 CSA C22.2 No. 250.13	✓	
ENEC	EN 61347-1 EN 61347-2-13 EN IEC 62384		
RCM	AS/NZS61347.2.13		
CCC	GB 19510.213		
CE	EN 61347-2-13 EN61347-1		

EMI/EMS	Criterion	Remark
Conduction Emission	FCC Part 15 Subpart B; ANSI C63.4	120Vac: Class B, 277Vac: Class A
Radiation Emission	FCC Part 15 Subpart B; ANSI C63.4	120Vac: Class B, 277Vac: Class A
Harmonic Current Emissions	EN IEC 61000-3-2	Class C
Surge	ANSI/C82.77-5	DM: 6kV,CM: 6kV,Criterion B
Ring Wave	ANSI/C82.77-5	DM: 6kV,CM: 6kV,Criterion B

SHENZHEN SOSEN ELECTRONICS CO.,LTD.
10F, Pengzhanhui No 1 Building, Zhongxin Road No 233, Xinqiao Street, Baoan District, Shenzhen, China
0755-29358800 www.sosen.com sosen@sosen.com

Safety Test Items

Safety Test Items	Technical Indicators	Remark
Insulation Requirements	UL Insulation Requirements	
Input-Case	2U+1000Vac	
Input-Dim	2U+1000Vac	
Dim-Case	500Vac	
Insulation Resistance	≥10MΩ	Input-Dim,Test voltage:500Vdc
Ground Resistance	≤0.1Ω	25A/1min
Leakage Current	≤0.75mA	277Vac

Note:
1. The power supply complies with the relevant EMC standards. The power supply, as part of the terminal equipment system, needs to be combined with the whole system to reconfirm EMC.
2. During voltage withstand test, please short-circuit between L/N, short-circuit between positive/negative output line, and short-circuit between positive/negative dimmer line and auxiliary power supply.

Performance Curves

Input Inrush Current

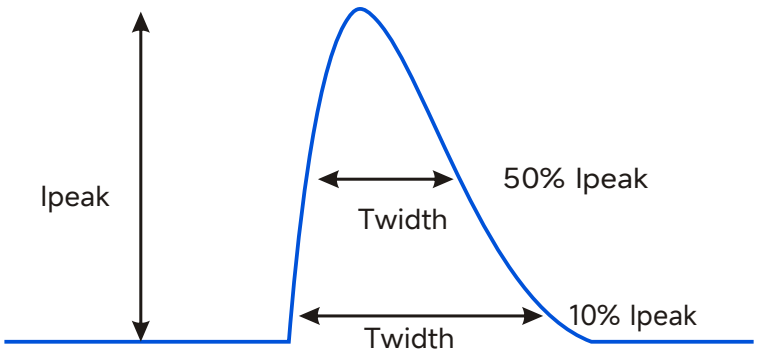

Vin	Ipeak	T(@10% of Ipeak)	T(@50% of Ipeak)
120Vac	50A	400uS	200uS
220Vac	90A	400uS	200uS
277Vac	110A	400uS	200uS

SHENZHEN SOSEN ELECTRONICS CO.,LTD.
10F, Pengzhanhui No 1 Building, Zhongxin Road No 233, Xinqiao Street, Baoan District, Shenzhen, China
0755-29358800 www.sosen.com sosen@sosen.com

Performance Curves

Output Voltage Vs. Output Current(Dim/AOC Window)

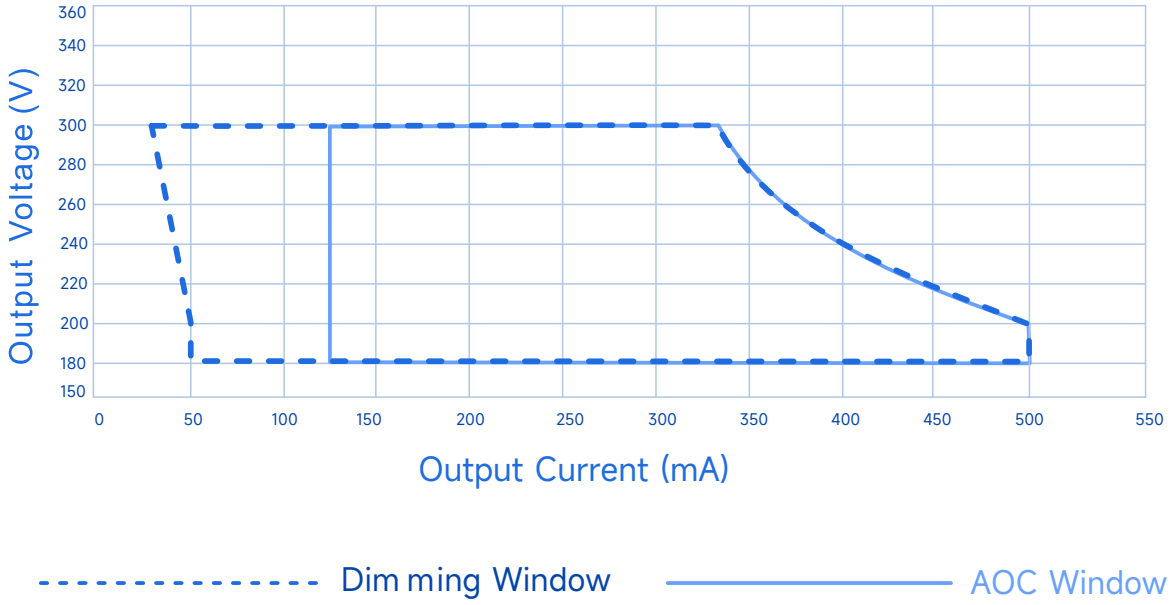

Efficiency Vs. Output Voltage(Vin=120Vac)

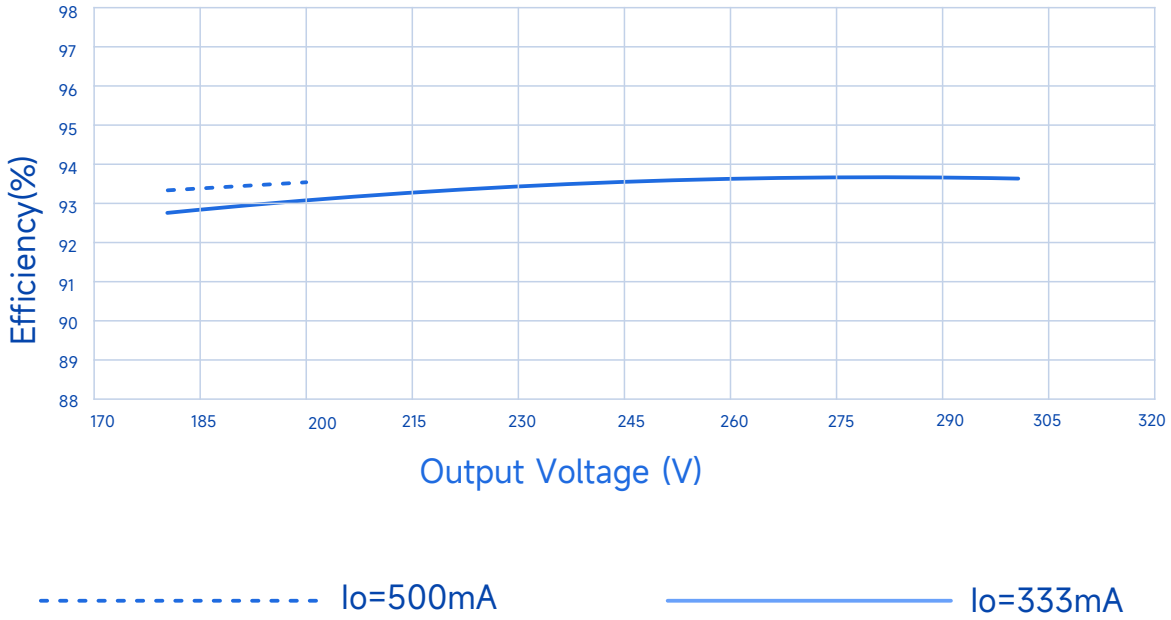

SHENZHEN SOSEN ELECTRONICS CO.,LTD.
10F, Pengzhanhui No 1 Building, Zhongxin Road No 233, Xinqiao Street, Baoan District, Shenzhen, China
0755-29358800 www.sosen.com sosen@sosen.com

Performance Curves

Efficiency Vs. Output Voltage (Vin=220Vac)

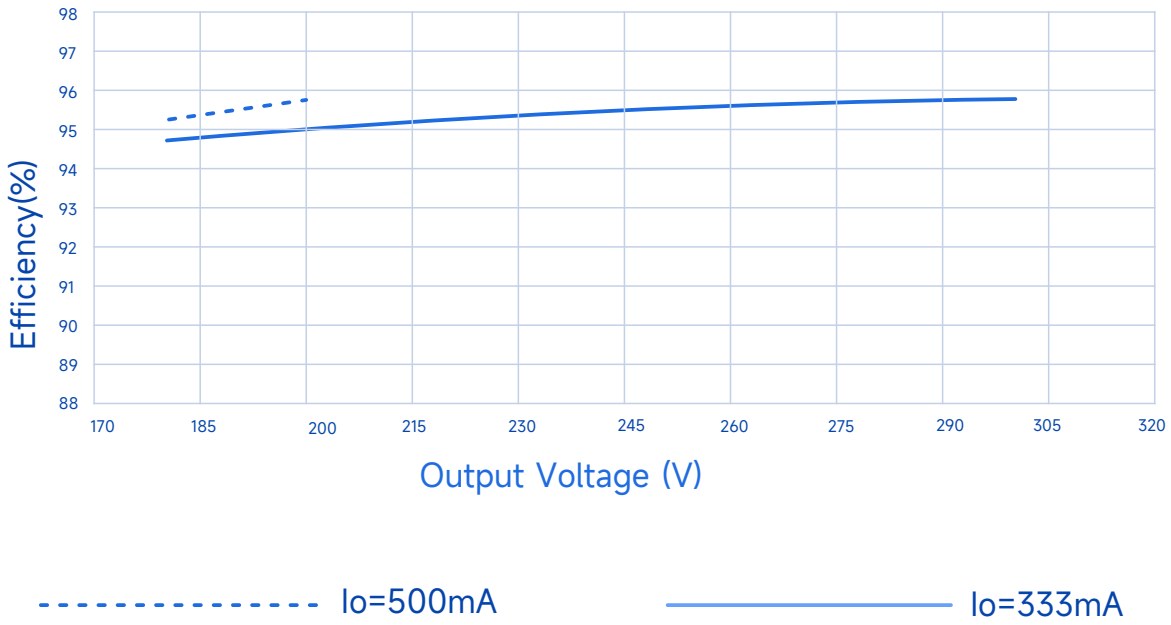

Efficiency Vs. Output Voltage(Vin=277Vac)

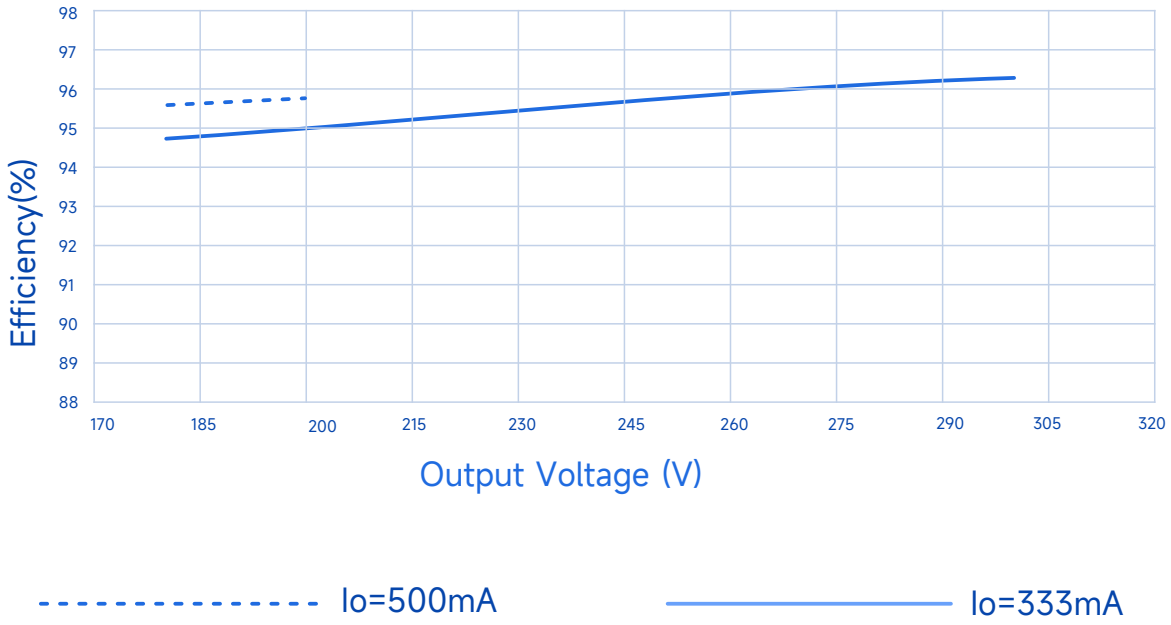

SHENZHEN SOSEN ELECTRONICS CO.,LTD.
10F, Pengzhanhui No 1 Building, Zhongxin Road No 233, Xinqiao Street, Baoan District, Shenzhen, China
0755-29358800 www.sosen.com sosen@sosen.com

Performance Curves

Power Factor Vs. Output Power

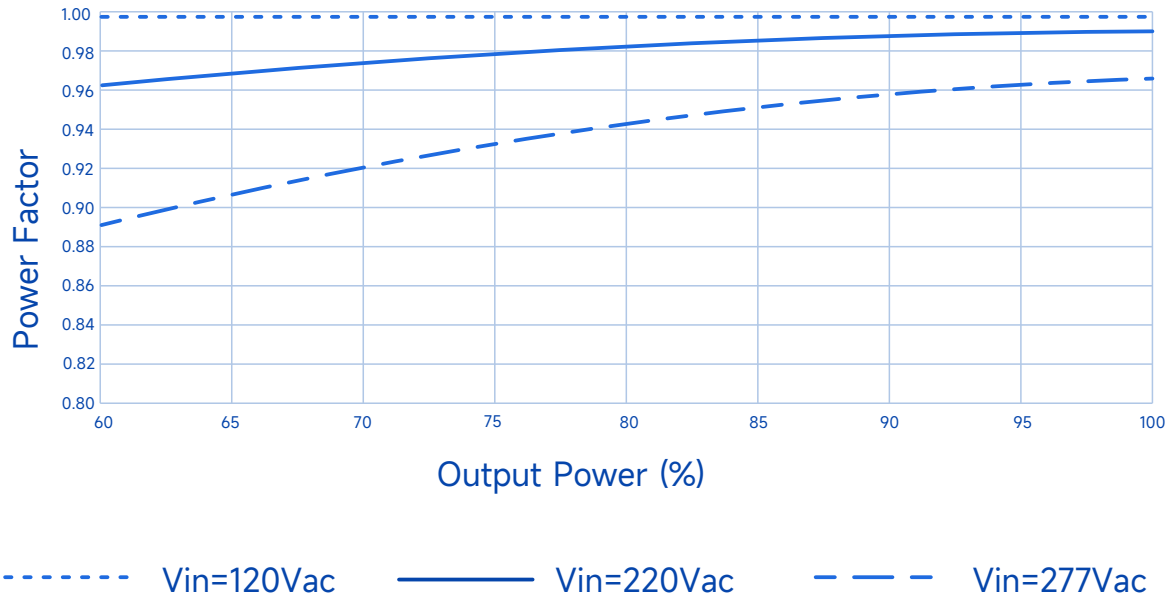

THD Vs. Output Power

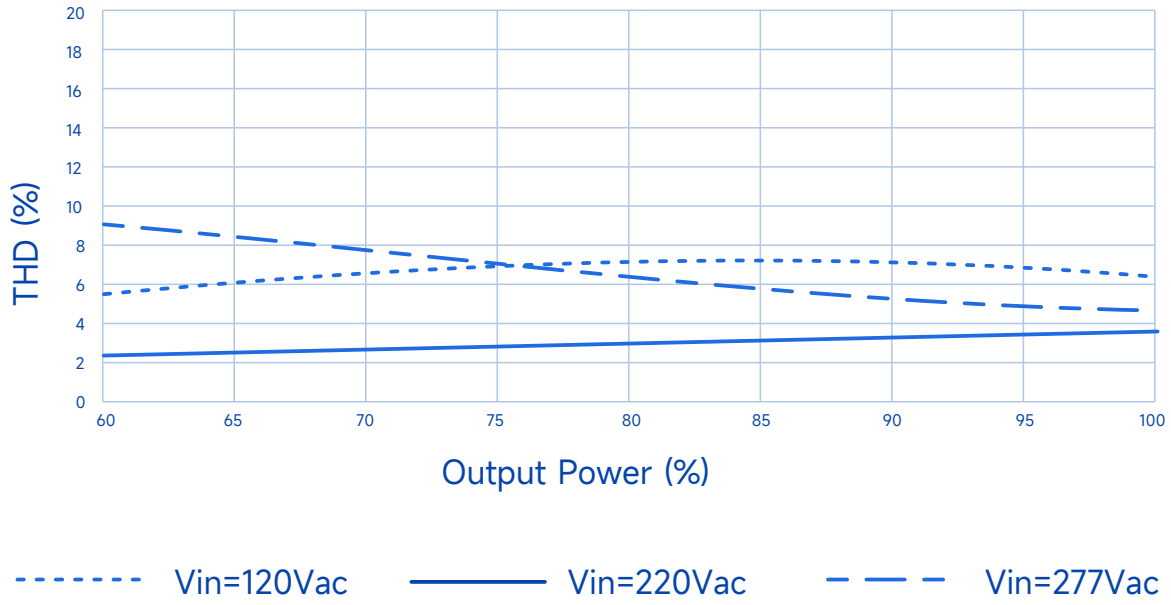

SHENZHEN SOSEN ELECTRONICS CO.,LTD.
10F, Pengzhanhui No 1 Building, Zhongxin Road No 233,
Xinqiao Street, Baoan District, Shenzhen, China
0755-29358800 www.sosen.com sosen@sosen.com

Performance Curves

Output Power Vs. Input Voltage

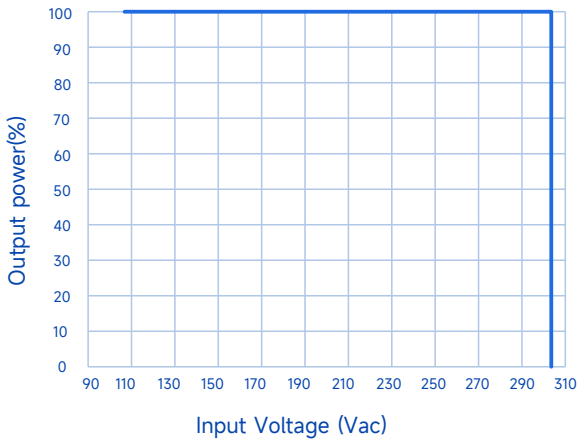

Output Power Vs. Case Temperature

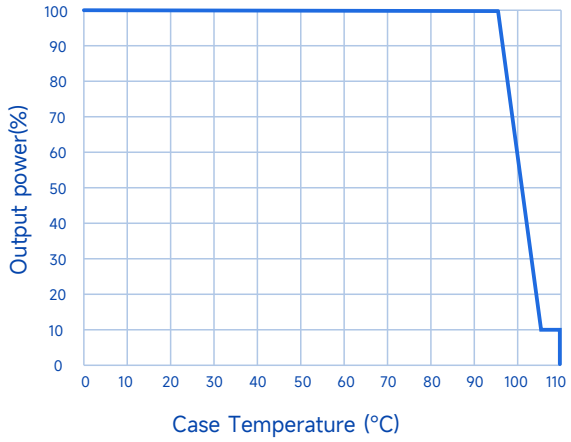

Output Power Vs. Dimming

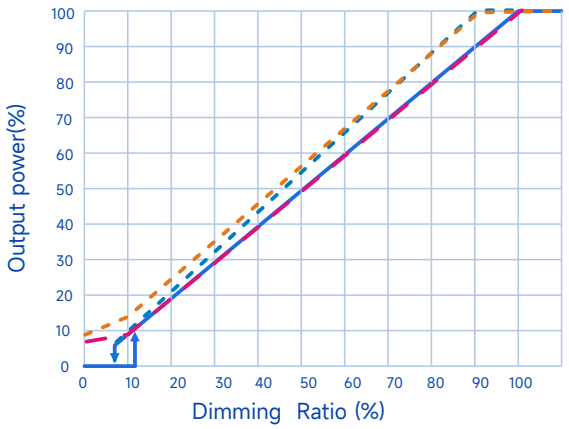

BHB/BHD/BHT:

0-10V ,PWM Dimming — Resistor Dimming

BB/BD:

1-10V ,PWM Dimming — Resistor Dimming

Lifetime Vs. Case Temperature

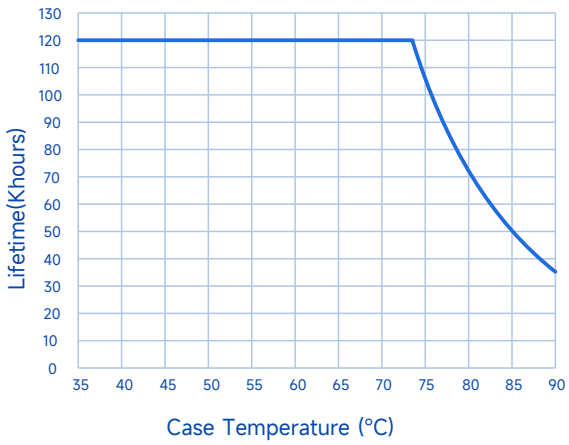

SHENZHEN SOSEN ELECTRONICS CO.,LTD.

10F, Pengzhanhui No 1 Building, Zhongxin Road No 233,
Xinqiao Street, Baoan District, Shenzhen, China
0755-29358800 www.sosen.com sosen@sosen.com

Programming connection diagram

Legacy Timer: Driver's O/P follows the pre-programmed timing curve after turn-on.

Auto-Adjust by Percentage: Driver's O/P will be adjusted by automatically changed dimming curve by the period percentage based on the latest 5 dimming curve.

Auto-Adjust by Mid-point: Driver's O/P will be adjusted by automatically changed dimming curve by mid-point based on the latest 5 dimming curve.

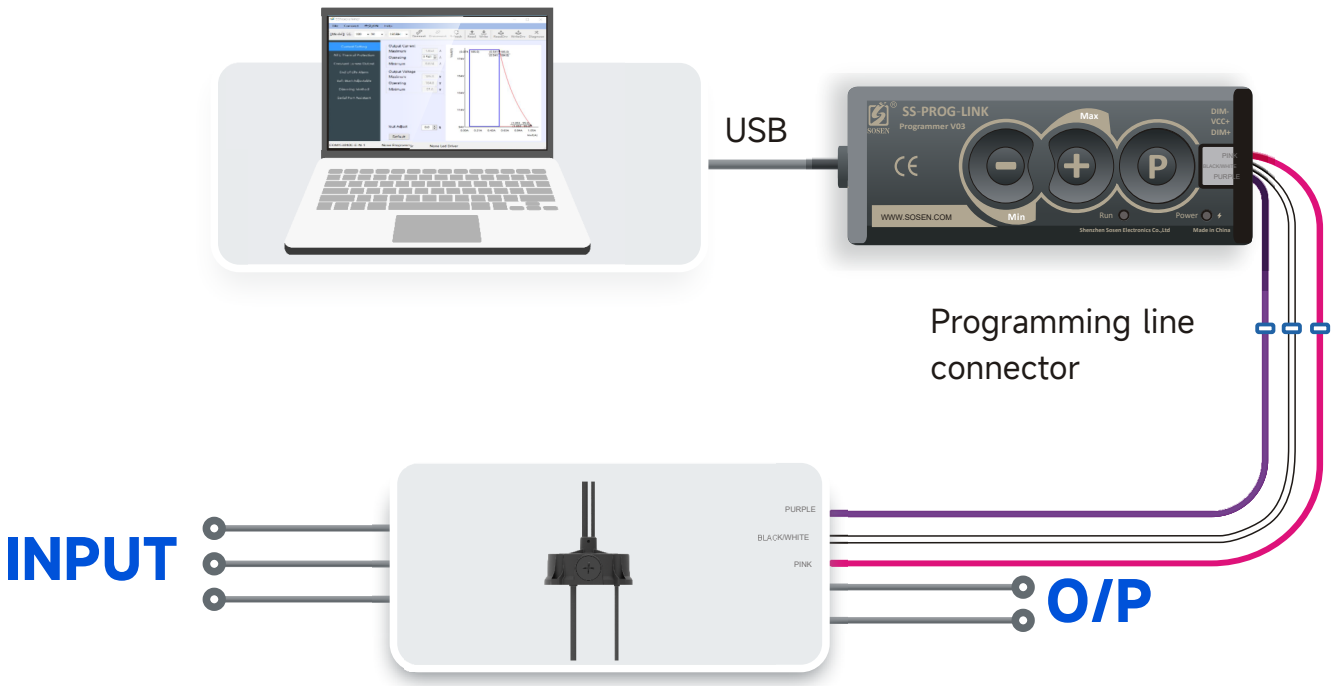

Note:

During the lifetime of the LED lamp, the driver continuously adjusts to increase the output optical power, thus ensuring that the LED lamp still has a constant optical power output after a long period of operation.

SHENZHEN SOSEN ELECTRONICS CO.,LTD.

10F, Pengzhanhui No 1 Building, Zhongxin Road No 233, Xinqiao Street, Baoan District, Shenzhen, China

0755-29358800 www.sosen.com sosen@sosen.com

SS-100CNH-300* LED DRIVER

Mechanical Characteristic

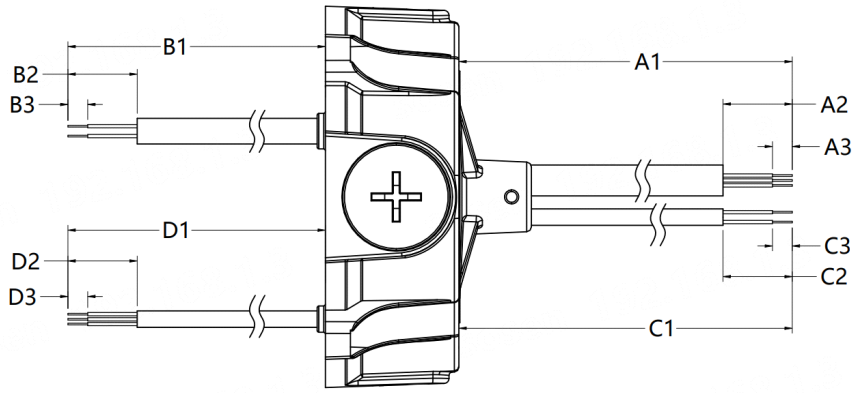

Optional wires	AC Input Cable (mm)			DC ouput Cable mm			UP Dimming Cable mm			Down Dimming Cable mm		
kind	A1	A2	A3	B1	B2	B3	C1	C2	C3	D1	D2	D3
1#	1830±10	45±5	10±2	200±10	22±3	9±1	1830±10	45±5	10±2	200±10	22±3	9±1
2#	1530±10	45±5	10±2	200±10	22±3	9±1	1530±10	45±5	10±2	200±10	22±3	9±1
3#	300±10	45±5	10±2	200±10	22±3	9±1	300±10	45±5	10±2	200±10	22±3	9±1

AC Input Cable	DC ouput Cable	UP Dimming Cable	Down Dimming Cable
UL: SJTW,3*18AWG, Black: ACL, White: ACN, Green: ⏚ ;	BHB/BHD/BHT: UL: 1.SJTW,2*18AWG,Red:V+, Black:V-; 2.SJTW,3*18AWG,Red:V+,Black:V1- (Cool temperature), Blue:V2- (Warm temperature) Global: SJOW, 4*17AWG, Red: V1+(Large angle); Brown: V2+ (Small angle); Blue: V1- (Cool light); Black: V2- (Warm light); BB/BD Global: 1. SJOW/HO5RN-F, 2x17AWG, Brown: V+, Blue: V-; 2. SJOW/HO5RN-F, 3x17AWG, Brown: V+, Black: Cool Light (V1-), Blue: Warm Light (V2-);	BHB/BHD/BHT: UL 21996 3*22AWG Purple: DIM+, Pink: DIM- Black/White: Vaux+; BB/BD: UL 21996 3*22AWG, Purple: DIM+, Pink: DIM- Black/White: VPP+;	UL/EU/Global : UL 21996 3*22AWG Purple: DIM+, Pink: DIM- Black/White: Vaux+;

SHENZHEN SOSEN ELECTRONICS CO.,LTD.
10F, Pengzhanhui No 1 Building, Zhongxin Road No 233,
Xinqiao Street, Baoan District, Shenzhen, China
0755-29358800 www.sosen.com sosen@sosen.com

Mechanical Characteristic

Name Description	Standard Code	mm(In.)
Fixing screw hole diameter	4-B	Φ6.5(0.26)
Housing Diameter	D	Φ116(4.57)
Enclosure height	H	62.5(2.46)
Eyelet hole (optional)	Z	M10*1.5(depth20mm) G1/2(depth20mm)
Eyebolt Holes	R	M4*0.7
Mounting hole size	W	113(4.45)
Tc point location	Y	32(1.26)

Note
1,Please follow the "LED Driver User Manual" obtained from SOSEN's official website for assembly.

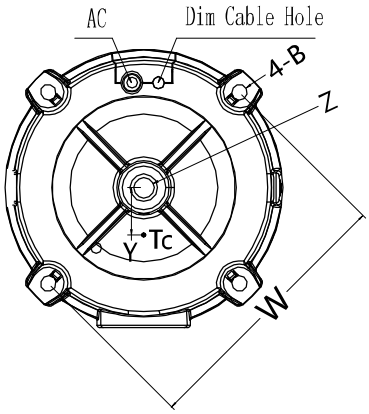

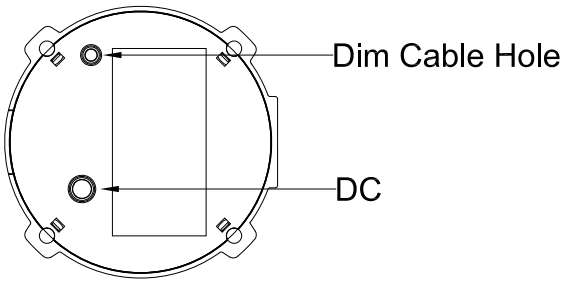

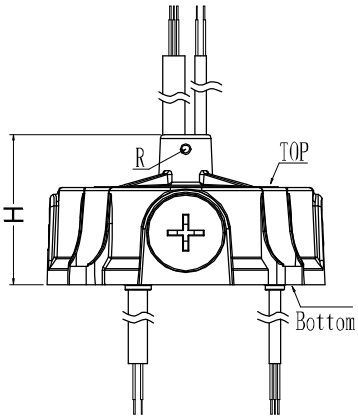

The bottom and top of the line are tuned at the same time.

SHENZHEN SOSEN ELECTRONICS CO.,LTD.
10F, Pengzhanhui No 1 Building, Zhongxin Road No 233, Xinqiao Street, Baoan District, Shenzhen, China
0755-29358800 www.sosen.com sosen@sosen.com

Assembly Tips

1.If the product has an external adjustable potentiometer, please adjust the current, it is recommended to use 704 silicone to adjust the current of the Seal the hole of adjusting current with 704 silicone and cover it with waterproof rubber plug.
2.When the dimmer line is not in use, please seal the connector of the dimmer line with insulating sleeve, so as not to string into the interfering signals and cause damage to the dimmer line, affecting the power supply. dimming line damage, affecting the normal operation of the power supply.
3.The trace routing on aluminum substrates is designed in compliance with creepage distance requirements specified by relevant certification regulations.
4.The creepage distance between LED+ and LED- on the aluminum substrate is designed in compliance with the relevant certification regulations.
5. aluminum substrate to minimize the laying of copper area, reduce junction capacitance, reduce eakage current.
6. LED lamp bead arrangement is recommended first and then string.
7. LED light board insulation level should meet the reliability design requirements.
8.other notes, please refer to the “LED driver power supply instruction manual”.

Warning

Insufficient or compromised insulation voltage resistance in LED light panels may cause breakdown and short circuits to earth, resulting in damage to the luminaire and LED driver, and posing significant safety hazards. It is recommended to install a residual current device (RCD) during application.

Package

- Outside carton dimension: L×W×H =577mm×385mm×162mm;
- 15PCS/Carton;
- Net weight/Piece: 0.76kg;Gross weight/Carton: 12.9kg;
- Please refer to the product name, model number, manufacturer identification, QC PASS, manufacturing date on the package.

Transportation

Packaging is designed suitable for transportation by trucks, vessels and flights. The products should be avoided direct sunlight and rain, loaded/unloaded with caution.

Storage

The product storage meets the standard of the GB 3873 83.
Products should be rechecked if stored for over 1 year before assembly.

RoHS

Products comply with RoHS Directive (2011/65/EU) and amendment 2015/863/EU.

SHENZHEN SOSEN ELECTRONICS CO.,LTD.
10F, Pengzhanhui No 1 Building, Zhongxin Road No 233, Xinqiao Street, Baoan District, Shenzhen, China
0755-29358800 www.sosen.com sosen@sosen.com

Revision History

Version	Description of Update	Updated Date	Remark
V00	Original Release	2025/06/06	
V01	Increase the power adjustment accuracy via DIP switches	2025/11/14	
V02	Update Total Harmonic Distortion	2026/01/12	
V03	Update cables	2026/03/19	
V04	Update the authentication token	2026/09/03	

SHENZHEN SOSEN ELECTRONICS CO.,LTD.

10F, Pengzhanhui No 1 Building, Zhongxin Road No 233,
Xinqiao Street, Baoan District, Shenzhen, China
0755-29358800 www.sosen.com sosen@sosen.com